Care Promise Welfare Society (REGD)

Application For Financial Help to Cancer-Hepaitis Patients

Name of Student	Ayansh Kumar
Father's Name	Mukesh Kumar
D. O. B.	2 year
Present Address	
Finacial Status	Nill
Monthly Income	No Income
Occupations	Housewife
Reason For Help	Blood Cancer

Intoduced by/Rec.by

Please enclose the following documents with the application :

1.Two Photo(attested)

2.Proof of Residential Address

3.ID of Student and father/mother

4.Hand written history and circumstances of the family

5.Copy of latest Progress Report

6.Ink siged letter by School Principal

7.Income Catifiate of Parents and Six months bank statements with first pageof Passbook.

8. Fee Details certified by principal

Passed by

Signature & Name

Approved by
For Care Promise Welfare Society

Secretary/CPWS Treasurer

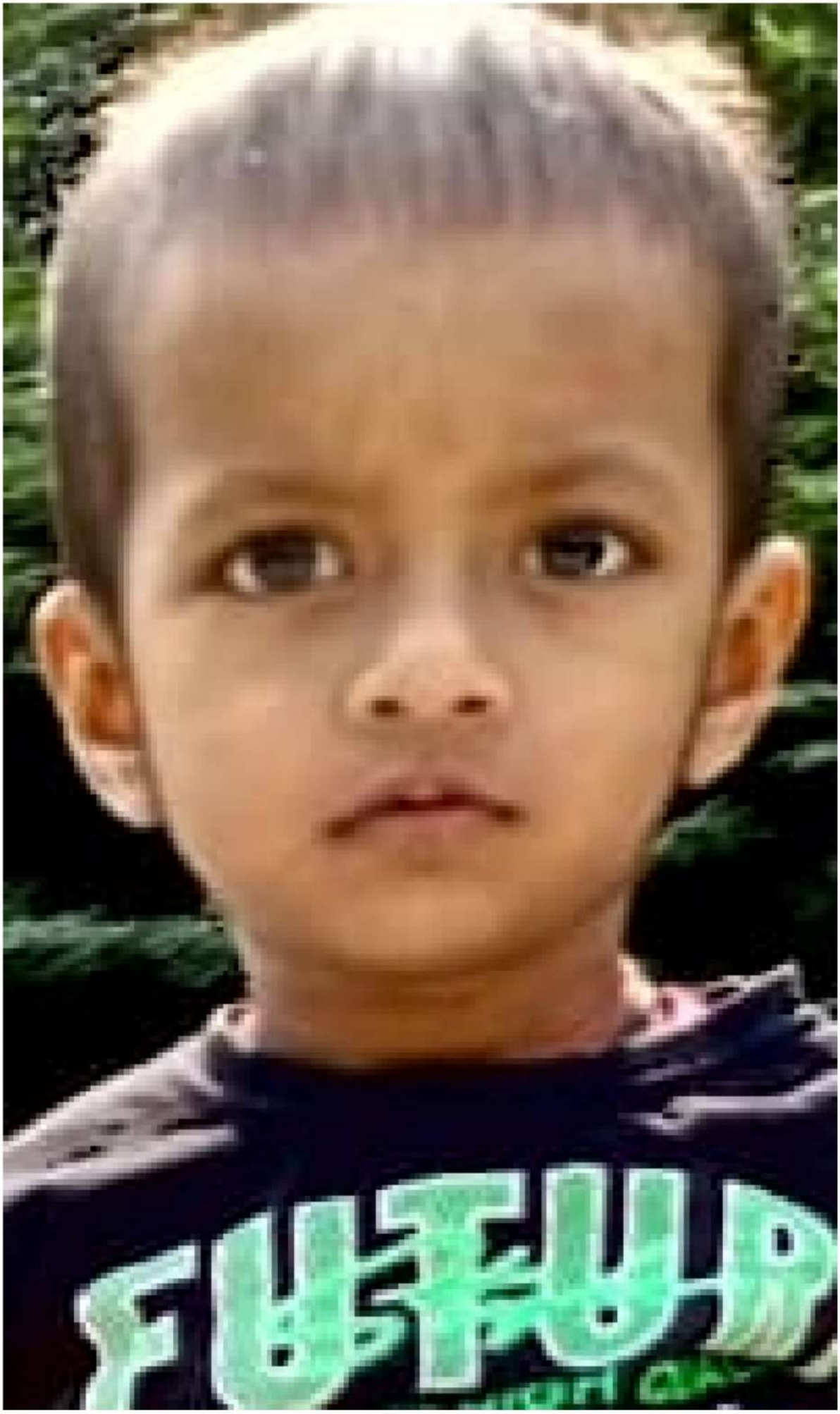

2

सेवा में

मेयर प्रतिभा पेशवर सोलंकी
सन्त नगर ईस्ट ऑफ कैलाश

महोदय नई दिल्ली

मेरा नाम मुकेश कुमार है। मैं बिहार का रहने वाला हूँ। मेरे बेटे आचार कुमार जिसकी उम्र 3 साल है। इसको कैंसर का बिमारी हो गई है। जिसके इलाज के लिए मैं अपने पत्नी के साथ दिल्ली (एम्स) लाया वहाँ पर जाँच होने के बाद बेड नहीं मिलने पर (जेडी हार्डिंग अस्पताल) में भेज दिया गया वहीं इलाज चलता है। आचार का पेट सीटी स्कैन होना है तथा और भी टेस्ट कराने है। जिसके लिए मुझे आपकी मदद की जरूरत है। हम बहुत गरीब परिवार से है बिहार में मैं एक ठेले पर फल बेचता था लेकिन बच्चे की बिमारी के कारण दिल्ली में रहता हूँ मेरे पास कोई काम नहीं है। इसलिए आपसे प्रार्थना करता हूँ मेरे बच्चे के इलाज के लिए सहायता करें मैं आपका आभारी रहूँगा।

भवदीय

मुकेश कुमार

3

Department of Pathology

G.B. Pant Institute of Post Grad ate Medical Education and Research, New Delhi - 110002 (GIPMER)

Biopsy no: T12790/22 Year: 2022

Name: AYANSH KUMAR Age: 2 Sex: Male

Referred By: DR NUPUR CR / OPD No: 28787

Receipt Date: 24-12-2022

Specimen Received:
T12790/22:Liver biopsy

Report:
T12790/22:Liver biopsy
Section examined show mainta n d lobular architecture. Six portal tracts identified show minir chronic lymphocytic inflammati n No interface activity. Hepatocytes show mild and focally ballooning degeneration with n r zonal steatosis amount less than 10 percent. Sinusoids are dilated and infiltrated by histio y s with groove nuclei, few ill defined granulomas are also se
Masson Trichrome- No fibrosis
Orcein- No copper associated p c ein
AFB- negative
On IHC histiocytes cells are CD68 positive in sinusoids.

Impression:
T12790/22:Liver
Feature are suggestive for histi c te storage disorders.
Kindly evaluate for Gaucher's d s ases.

Reported by:

for Pobit

r Puja Sakhuja/Dr RM(SR)

erified by: Dr. AK

ate of Report: 09-01-2023

8.4.1.1 Group 1: Initial Treatment

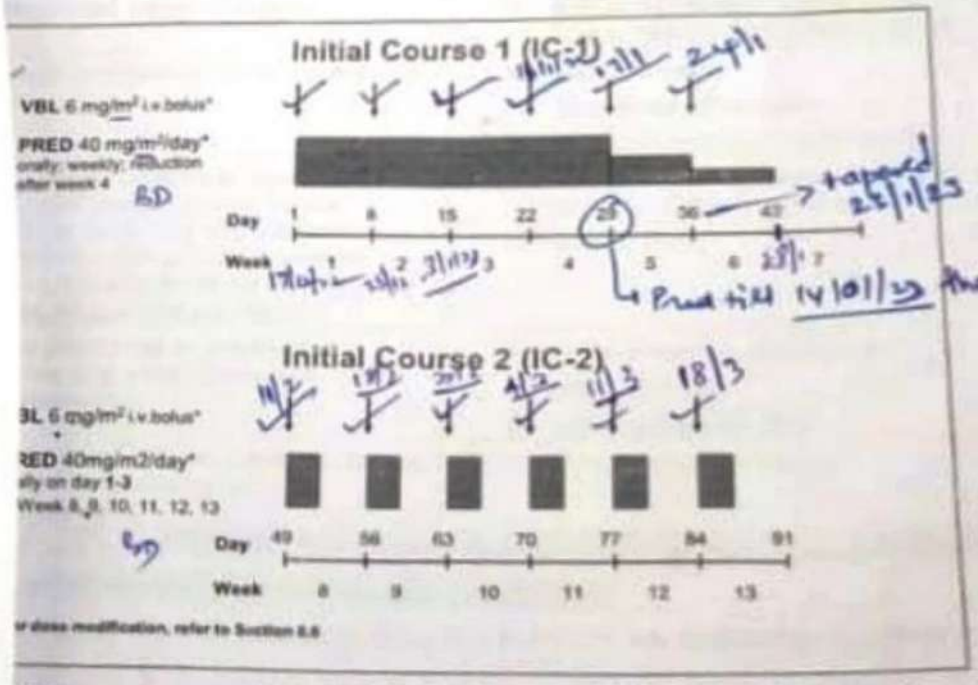

re 9. Stratum I: Initial Course 1 (IC-1) and Initial Course 2 (IC-2)

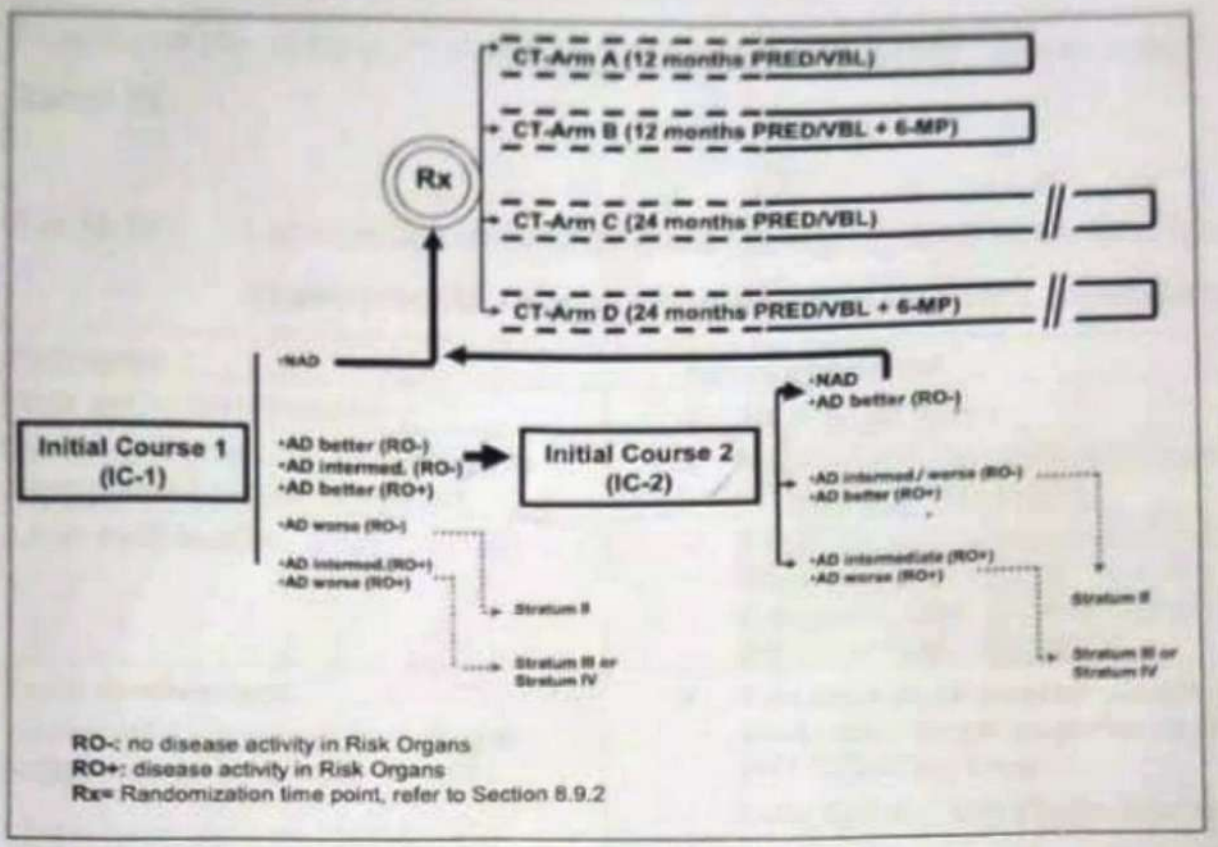

Figure 8. **Stratum I: Overall therapy plan for Group 1 (MS-LCH)**

Department of Nuclear Medicine and PET
All India Institute of Medical Sciences, New Delhi, India.

^{18}F-FDG WHOLE BODY PET-CT STUDY

Patient Name: AYANSH KUMAR		
Study ID: FDG/26650/23	**UHID:106391315**	**Age/Sex:2Y/M**
		Date: 04.11.2023

Indication: Multisystem LCH, Post CT (last on 15.10.2023), For response assessment.

Procedure: PET-CT acquisition was done 60 minutes after injection of 10mCi ^{18}F-FDG by intravenous route, from the level of orbits to mid-thigh. CT was done for attenuation correction and anatomical localization.

PET-CT Findings:

Head and Neck: *FDG uptake noted in adenoids and bilateral palatine tonsils with few sub-centimetric bilateral cervical lymph nodes – infective. Opacification of the bilateral maxillary sinuses.*

Thorax: *Few sub-centimetric bilateral axillary lymph nodes noted with preserved fatty hilum.* FDG uptake noted in the thymus. Physiological FDG uptake is seen in the myocardium. Lungs, large airways, pleura, heart, great vessels and other mediastinal structures appear normal on CT.

Abdomen-Pelvis: *Hepatomegaly noted (CC span ~12cm). Few sub-centimetric bilateral inguinal lymph nodes noted with preserved fatty hilum.* Biliary ducts, spleen, kidneys, stomach, adrenals, pancreas, retroperitoneum, bowel and urinary bladder appear normal on CT. No ascites is noted.

Musculo-Skeletal System: **Non FDG avid lytic changes noted in bilateral frontal, left parietal and left orbital lateral wall. Opacification noted in bilateral mastoid air cells.** Physiological FDG distribution is seen rest of the visualized axial and appendicular skeleton.

IMPRESSION:

- **Lytic changes in bilateral frontal, left parietal and left orbital lateral wall and right mastoid regions with no significant metabolically active – metabolically resolved.**
- **As compared to previous PET/CT study (FDGN/31246/23; dated 14.08.2023), there is resolution of metabolic activity in the previously detected skeletal lesions – complete metabolic response.**

Dr Shamim A Shamim
Consultant

Dr Aparna Mahalik
Senior Resident

Date Imaging 01/04/24

To Peds daycare
Kindly provide contact details of sedation JR for PET CT
Name -
Number

Date Previous PET (Private/AIIMS)

Treatment history :

JR/NM

Instruction to Patients :

1. Please bring DD/Pay order for Rs. 5000/7500 in favour "AIIMS MAIN GRANT ACCOUNT" and write name of patient on reverse DD with date of scan. **Payment is to be made on the day of the test.**
   For 2nd PET Scan charge are only Rs. 4000/-.
2. **Charge for PET/CT film is Rs. 100/-**
3. Patient may eat light breakfast before 7 am after that may take water only, no food for at least 4-6 hours.
4. Must bring all old records.
5. Study is subject to availability of **RADIOISOTOPE**
6. Report shall be available 24-48 hrs. after test.
7. Study my take whole day have patience and co-operate with staffs.

Appt. Date : 8/4/24 **Time :** 9A

Consent

I have been explained the risk with iodinated contrast media & radiopharmaceutical injection. I hereby give my consent for the injection of contrast media/ radiopharmaceutical to the patient by any route and dose as demed necessary / for PET/CT biopsy / Sedation.

Signature ..... Name ..... Date..... Relation.....

PET SCAN FORM

अखिल भारतीय आयुर्विज्ञान संस्थान/ALL INDIA INSTITUTE OF MEDICAL SCIENCES

नाभिकीय चिकित्सा एवं पी.ई.टी. विभाग/Department of Nuclear Medicine & PET

अंसारी नगर, नई दिल्ली-110029/Ansari Nagar, New Delhi-110029

Tel. : 91-11-26593210

Physician request form for Position Emission Tomography (PET) Scan

(Please Note : Scan will not be done if form is not properly filled)

Date: 26/3/24

NAME: Ayansh Kumar

AGE/GENDER: 2 years/♂ MOBILE :

LMP: ⊖

UHID: 106391315 Contact No:

FBS:

INJECTED ACTIVITY (mCi): Ht: Urea:

TIME OF INJECTION: Wt: Creatinine

Present Clinical History and Diagnosis: Multisystemic LCH P/CT (LD 15/10/23) On maintenance 6MP and methotrexate then Pt. has persistant hepatosplenomegaly

Clinical Question / PET Scan Indication : Disease status

26/3/24 FDG Scanner

DM ⊖

S_2 ⊖

CT 15/1

RT ⊖

JR/

Past Medical History with any current medication for same:

TB: DM:

(a) Histopathological Reports:

come on /4/24 on 10am

(b) Biochemical Markers:

ALL INDIA INSTITUTE OF MEDICAL SCIENCES
DEPT. OF NUCLEAR MEDICINE
CLINICAL PET FACILITY
ANSARI NAGAR, NEW DELHI-11029

AIIMS UHID NO. 10639135 **CHALLAN FORM** Dated: 26/3/24

Cashier may please receive a sum of **Rs.5000/7500/4000 (Rupees Five Thousand / Seven Thousand Five Hundred/Four Thousand only) Vide D.D. No.** Cash **from/Shri/Dr/Mrs. Ms. clinical Dept/Unit** NMD on account of charges for PET/Scan, Creditable to Sub-Head "PET Charges "in cash of vide cheque/Bank **Draft No. no. ----Dated:**

(Please give breakup of the amount, if necessary)
Creditable to head/sub head .....

OFFICER IN-CHARGE SEC/DEPT.

R.NO ..... Dt. ..... for
Rs. .....
(Rupees .....)

CASHIER/ASST. CASHIER

PET SCAN FORM

अखिल भारतीय आयुर्विज्ञान संस्थान/ALL INDIA INSTITUTE OF MEDICAL SCIENCES

नाभिकीय चिकित्सा एवं पी.ई.टी. विभाग/Department of Nuclear Medicine & PET

अंसारी नगर, नई दिल्ली-110029/Ansari Nagar, New Delhi-110029

Tel. : 91-11-26593210

Physician request form for Position Emission Tomography (PET) Scan

(Please Note : Scan will not be done if form is not properly filled)

Date: 6/11/24

NAME: Ayaush Kumar

AGE/GENDER: 4 y/M

Name of Referring Dept. / Physician

LMP:

UHID: 10639/315

Contact No: 72[redacted]7

FBS: (-)

To do on 22/11/24

Early date

Dr. RAKESH KUMAR
Professor & Head
Diagnostic Nuclear Medicine Division
Dept. of Nuclear Medicine
AIIMS, New Delhi-110029

Present Clinical History and Diagnosis:

KLCO multisystem LCH post CT (last on 15/10/23)

Currently on 6MP @ 50mg/m
MTX @ 20mg/m

1/4/24

Clinical Question / PET Scan Indication :

PET CT 1/4/10 (1) hepatosplenomegaly to look for disease activity

Previous PET – MA B/L cervical mediastinal, Rt internal mammary, abdominopelvic & Lt inguinal LNs

Past Medical History with any current medication for same:

esp(TB/DM/Autoimmune) Lytic changes in B/L frontal, Lt parietal & Lt orbital lateral wall & Rt mastoid

(a) Previous Pathology Reports:

(b) Biochemical Markers:

Any Other relevant Info

Date

Hb 9.4 TLC 4730

DLC ANC N57 Plat
ANC: 2730 2.07L
ALC: 1120

Wt. 13.20 kg

Ht.

Swiss multisystem LCH

on maintenance : 21/11/2013

no fresh issues

on 6MP @ 50mg/m²
MTX @ 20mg/m²

no fresh issues

Vitals

HR - normal
RR - normal
Prgood Pulsams
CRT <2sec
PA ↓ Bean
S Tem

CNS
CVS
RS
WNL

Adv

- T. 6MP (50mg)

M	T	W	T	F	S S
1½	½	½	½	½	½

- T. MTX (2.5mg) 4½ tab every week
- candid NP
  chlorhex mw
- Nystatin 1 month

Dr. Lohitha

Hb TLC

DLC ANC Plat

Clubbing Pitting edema

- Plan PBC CT
- monitor liver/spleen
- Parents are not very keen on getting investigated immediately
- Watcher for PBC CT

↑ in liver/spleen size, also look for disease activity

Rohitha

Dr J DEBAYTHI
Senior Resident
Department of Paediatrics
VMC & Safdarjung Hospital
Ph: 9650 [illegible]

8

9

G Pay

accepted here

CARE PROMISE WELFARE SOCIETY

+91 99908 98404

9990898404@okbizaxis

BHIM UPI